8806/8807 SERIES

1.27mm PITCH CONNECTOR / MULTI-PIN TYPE

RoHS Compliant

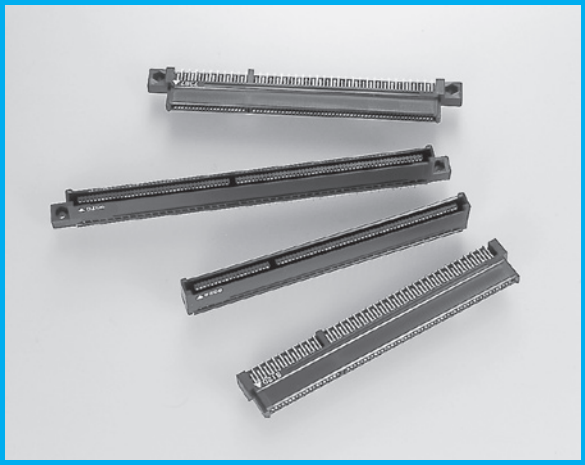

FEATURES

- With a completely-independent two-point contact system, a stable contact pressure is maintained at all times.
- Low insertion force and withdrawal force.
- With a guide mechanism, smooth mating can be achieved.
- Wide variations in the number of contacts (120, 140, 160, 180 and 200 pins) are available.
- For 200 pin connector, both insertion and withdrawl force are low at 134.4N and 64.7N respectively.

ORDER CODE

880□-□□□-170□□-F

① ② ③ ④ ⑤ ⑥

*Please order in multiples of the quantity per package.

① 【Type】 Receptacle **8806 :** With flanges and without hooks **8807 :** Without flanges and with hooks

② 【Number of contacts】 **120 :** 120pin **140 :** 140pin **160 :** 160pin **180 :** 180pin **200 :** 200pin

③ 【Contact name】 **170**

④ 【Contact tail style】 **S :** Straight **L :** Right angle

⑤ 【Plating of contact area】 **Omit :** Au 0.05 μ m (Standard) **D :** Au 0.25 μ m(Upon request)

⑥ 【RoHS】 **F :** RoHS Compliant

If you would like semi-customized products, please contact your local KEL sales office.

ORDER CODE

881□-□□□-170□□-F

① ② ③ ④ ⑤ ⑥

*Please order in multiples of the quantity per package.

① 【Type】 Plug **8816 :** With flanges and without hooks **8817 :** Without flanges and with hooks

② 【Number of contacts】 **120 :** 120pin **140 :** 140pin **160 :** 160pin **180 :** 180pin **200 :** 200pin

③ 【Contact name】 **170**

④ 【Contact tail style】 **S :** Straight **L :** Right angle

⑤ 【Plating of contact area】 **Omit :** Au 0.05 μ m (Standard) **D :** Au 0.25 μ m(Upon request)

⑥ 【RoHS】 **F :** RoHS Compliant

If you would like semi-customized products, please contact your local KEL sales office.

SPECIFICATIONS

Material and plating	
Insulator material	Glass-filled Nylon 66 (UL94V-0),Black
Contact material	Copper alloy
Contact plating	(Contact area) Gold over Nickel (Terminal area) Tin copper over Nickel
Retention clip material	Copper alloy
Retention clip plating	Tin copper over Nickel

Electrical Characteristics	
Current rating	0.5A per contact
Contact resistance	25mΩ max.
Dielectric withstanding voltage	650V AC for 1 minute
Insulation resistance	1,000MΩ min. at 500V DC
Operating temperature	-55°C to +85°C

*The flexing of boards in vertical and stacked mating can occur. Boards must be reinforced sufficiently to prevent gaps from occurring between mated connectors, such gaps can occur near the center of a mated pair of long connectors and can effect connector reliability.
Please take measures to address this and contact your local KEL sales office for more information.

Mating Drawing

Unit : mm(inch)

◆Horizontal Mating

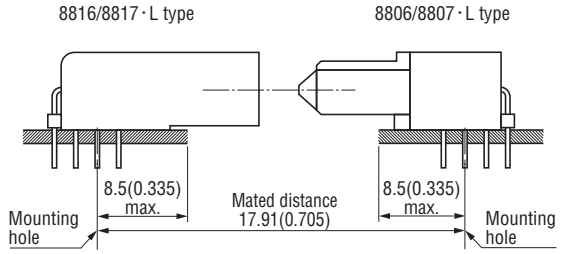

◆Stacked Mating

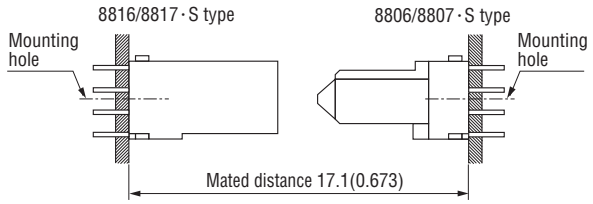

◆Vertical Mating

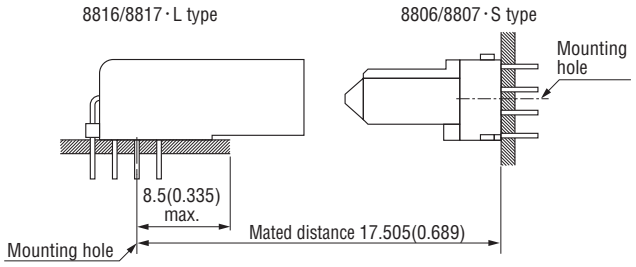

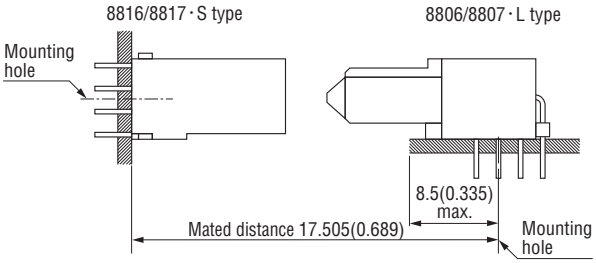

8806-□□□-170S□-F (Receptacle, With flanges, Straight)

Unit : mm(inch)

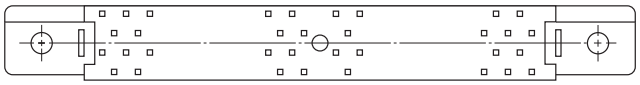

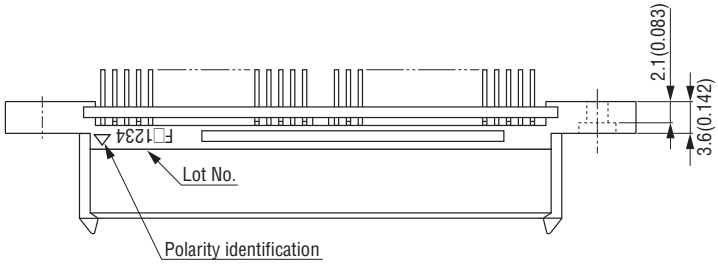

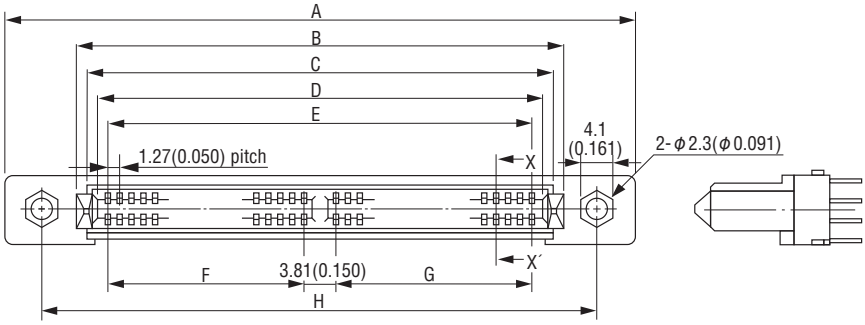

Printed Circuit Board Layout (Component Side View)

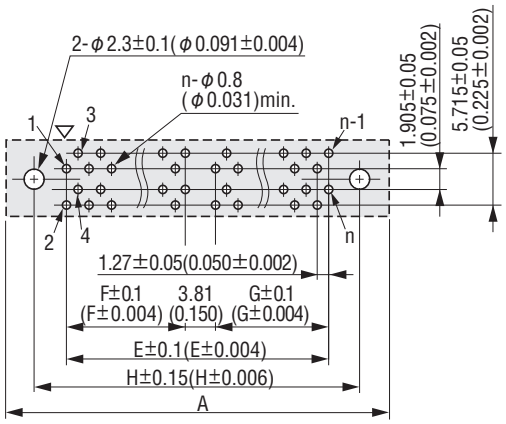

Recommended PCB Thickness $t = 1.6^{+0.2}_{-0.1}$ $(0.063^{+0.008}_{-0.004})$

▽=Polarity identification "n" is number of contacts.

X-X′Cross Section

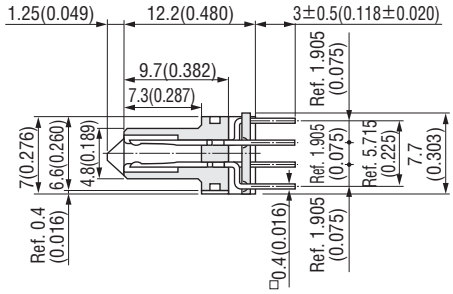

Packing style
Pipe

Product Table / Dimensions

No. of contact	Part Number	A	B	C	D	E	F	G	H	Number of packaging
120	8806-120-170S□-F	99.2 (3.906)	84.1 (3.311)	81.47 (3.207)	79.47 (3.129)	77.47 (3.050)	24.13 (0.950)	49.53 (1.950)	91.44 (3.600)	5
140	8806-140-170S□-F	111.9 (4.406)	96.8 (3.811)	94.17 (3.707)	92.17 (3.629)	90.17 (3.550)	24.13 (0.950)	62.23 (2.450)	104.14 (4.100)	4
160	8806-160-170S□-F	124.6 (4.906)	109.5 (4.311)	106.87 (4.207)	104.87 (4.129)	102.87 (4.050)	36.83 (1.450)	62.23 (2.450)	116.84 (4.600)	4
180	8806-180-170S□-F	137.3 (5.406)	122.2 (4.811)	119.57 (4.707)	117.57 (4.629)	115.57 (4.550)	49.53 (1.950)	62.23 (2.450)	129.54 (5.100)	3
200	8806-200-170S□-F	150.0 (5.906)	134.9 (5.311)	132.27 (5.207)	130.27 (5.129)	128.27 (5.050)	62.23 (2.450)	62.23 (2.450)	142.24 (5.600)	3

These connectors do not have a symmetrical board layout pattern. The 120 pin connectors have 80 pins on one side and 40 pins on the other. All other pin counts have 100 pins on one side and the balance on the other side.

8807-□□□-170S□-F (Receptacle, Without flanges, With hooks, Straight)

Unit : mm(inch)

Printed Circuit Board Layout (Component Side View)

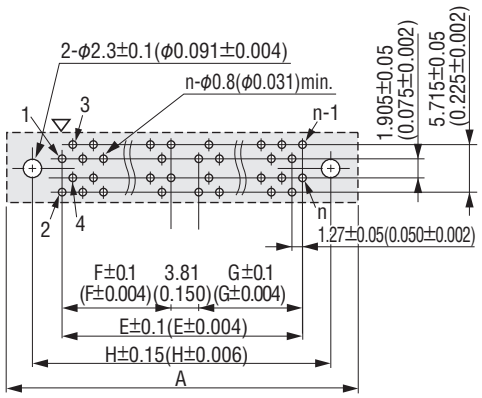

Recommended PCB Thickness $t = 1.6^{+0.2}_{-0.1}$ $(0.063^{+0.008}_{-0.004})$

▽=Polarity identification "n" is number of contacts.

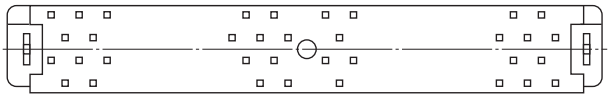

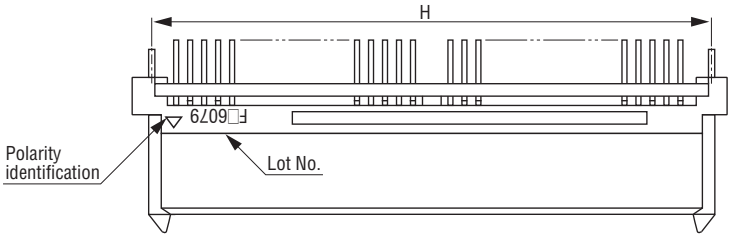

X-X′Cross Section

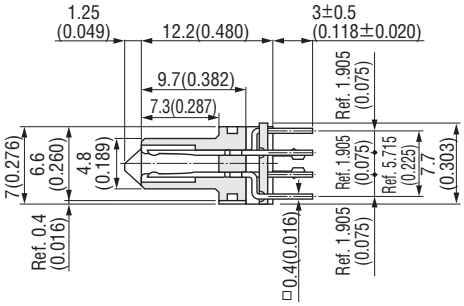

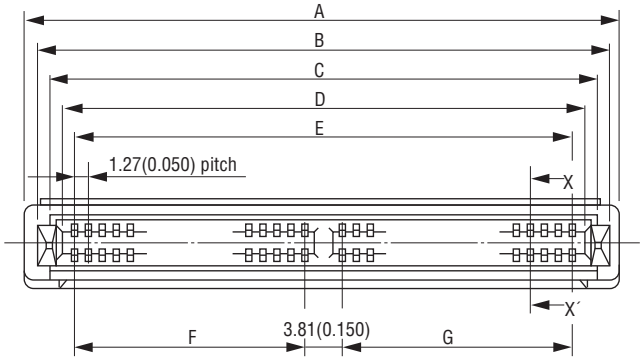

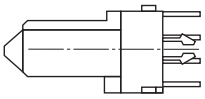

Packing style
Pipe

Product Table / Dimensions

No. of contact	Part Number	A	B	C	D	E	F	G	H	Number of packaging
120	8807-120-170S□-F	86.5 (3.406)	84.1 (3.311)	81.47 (3.207)	79.47 (3.129)	77.47 (3.050)	24.13 (0.950)	49.53 (1.950)	83.82 (3.300)	5
140	8807-140-170S□-F	99.2 (3.906)	96.8 (3.811)	94.17 (3.707)	92.17 (3.629)	90.17 (3.550)	24.13 (0.950)	62.23 (2.450)	96.52 (3.800)	5
160	8807-160-170S□-F	111.9 (4.406)	109.5 (4.311)	106.87 (4.207)	104.87 (4.129)	102.87 (4.050)	36.83 (1.450)	62.23 (2.450)	109.22 (4.300)	4
180	8807-180-170S□-F	124.6 (4.906)	122.2 (4.811)	119.57 (4.707)	117.57 (4.629)	115.57 (4.550)	49.53 (1.950)	62.23 (2.450)	121.92 (4.800)	4
200	8807-200-170S□-F	137.3 (5.406)	134.9 (5.311)	132.27 (5.207)	130.27 (5.129)	128.27 (5.050)	62.23 (2.450)	62.23 (2.450)	134.62 (5.300)	3

These connectors do not have a symmetrical board layout pattern. The 120 pin connectors have 80 pins on one side and 40 pins on the other. All other pin counts have 100 pins on one side and the balance on the other side.

8816-□□□-170S□-F (Plug, With flanges, Straight)

Unit : mm(inch)

Printed Circuit Board Layout (Component Side View)

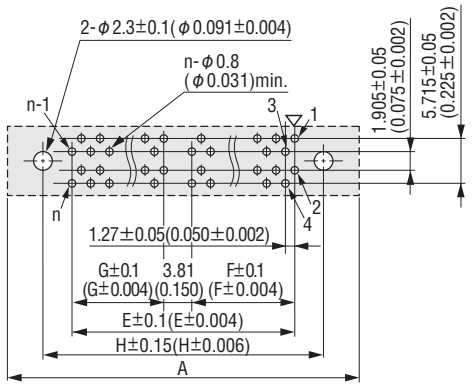

Recommended PCB Thickness $t = 1.6^{+0.2}_{-0.1}$ $(0.063^{+0.008}_{-0.004})$

▽=Polarity identification "n" is number of contacts.

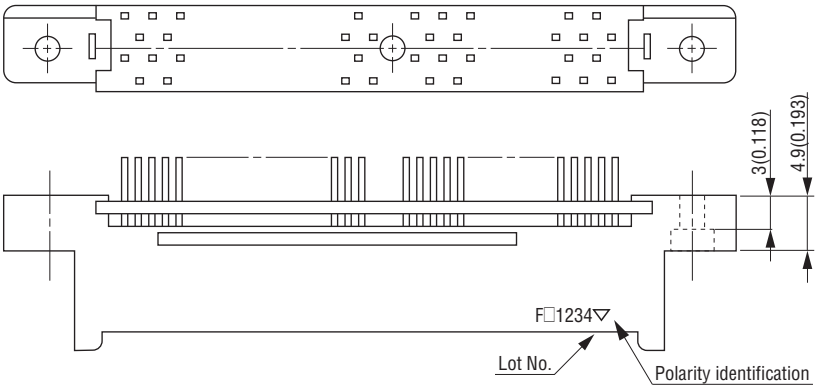

X-X′Cross Section

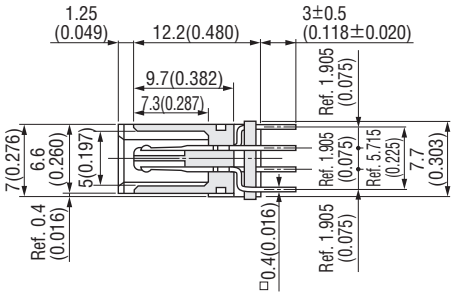

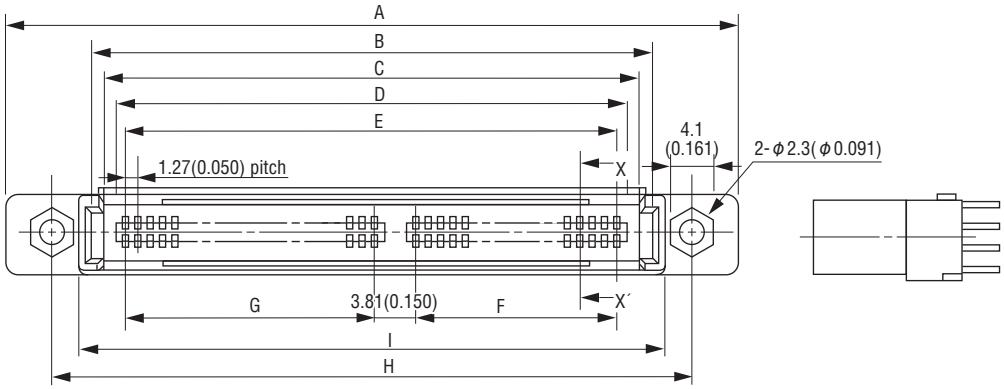

Packing style
Pipe

Product Table / Dimensions

No. of contact	Part Number	A	B	C	D	E	F	G	H	I	Number of packaging
120	8816-120-170S□-F	99.2 (3.906)	84.5 (3.327)	81.87 (3.223)	79.17 (3.117)	77.47 (3.050)	24.13 (0.950)	49.53 (1.950)	91.44 (3.600)	86.5 (3.406)	5
140	8816-140-170S□-F	111.9 (4.406)	97.2 (3.827)	94.57 (3.723)	91.87 (3.617)	90.17 (3.550)	24.13 (0.950)	62.23 (2.450)	104.14 (4.100)	99.2 (3.906)	4
160	8816-160-170S□-F	124.6 (4.906)	109.9 (4.327)	107.27 (4.223)	104.57 (4.117)	102.87 (4.050)	36.83 (1.450)	62.23 (2.450)	116.84 (4.600)	111.9 (4.406)	4
180	8816-180-170S□-F	137.3 (5.406)	122.6 (4.827)	119.97 (4.723)	117.27 (4.617)	115.57 (4.550)	49.53 (1.950)	62.23 (2.450)	129.54 (5.100)	124.6 (4.906)	3
200	8816-200-170S□-F	150.0 (5.906)	135.3 (5.327)	132.67 (5.223)	129.97 (5.117)	128.27 (5.050)	62.23 (2.450)	62.23 (2.450)	142.24 (5.600)	137.3 (5.406)	3

These connectors do not have a symmetrical board layout pattern. The 120 pin connectors have 80 pins on one side and 40 pins on the other. All other pin counts have 100 pins on one side and the balance on the other side.

8817-□□□-170S□-F (Plug, Without flanges, With hooks, Straight)

Unit : mm(inch)

Printed Circuit Board Layout (Component Side View)

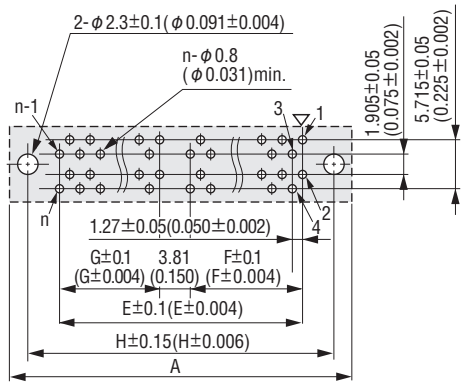

Recommended PCB Thickness $t = 1.6^{+0.2}_{-0.1}$ $(0.063^{+0.008}_{-0.004})$

▽=Polarity identification "n" is number of contacts.

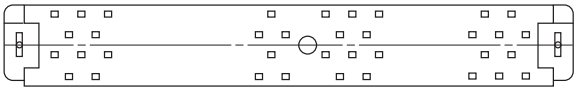

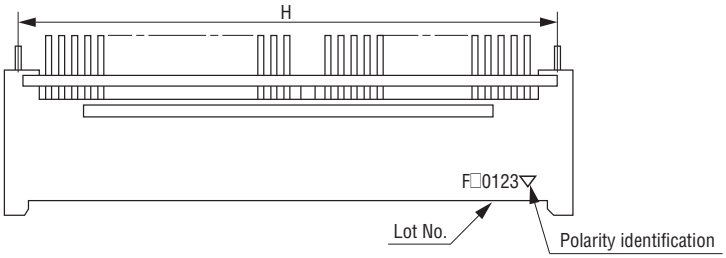

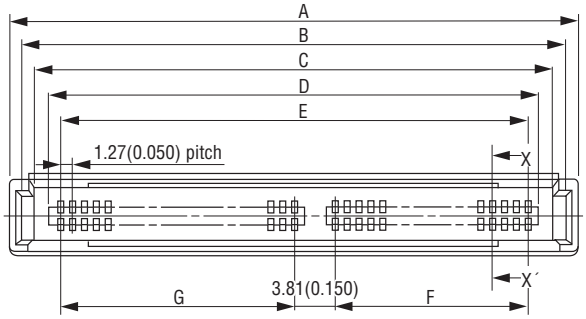

For 160, 180, 200 pins

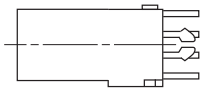

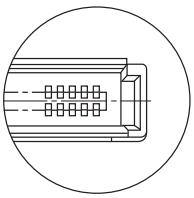

For 120, 140 pins

X-X′Cross Section

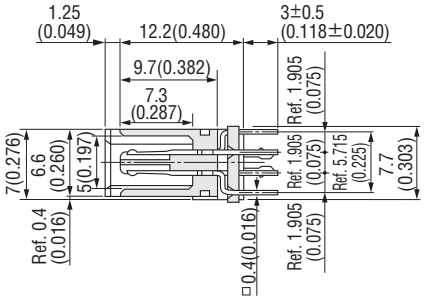

Packing style
Pipe

Product Table / Dimensions

No. of contact	Part Number	A	B	C	D	E	F	G	H	Number of packaging
120	8817-120-170S□-F	86.5 (3.406)	84.5 (3.327)	81.87 (3.223)	79.17 (3.117)	77.47 (3.050)	24.13 (0.950)	49.53 (1.950)	83.82 (3.300)	5
140	8817-140-170S□-F	99.2 (3.906)	97.2 (3.827)	94.57 (3.723)	91.87 (3.617)	90.17 (3.550)	24.13 (0.950)	62.23 (2.450)	96.52 (3.800)	5
160	8817-160-170S□-F	111.9 (4.406)	109.9 (4.327)	107.27 (4.223)	104.57 (4.117)	102.87 (4.050)	36.83 (1.450)	62.23 (2.450)	109.22 (4.300)	4
180	8817-180-170S□-F	124.6 (4.906)	122.6 (4.827)	119.97 (4.723)	117.27 (4.617)	115.57 (4.550)	49.53 (1.950)	62.23 (2.450)	121.92 (4.800)	4
200	8817-200-170S□-F	137.3 (5.406)	135.3 (5.327	132.67 (5.223)	129.97 (5.117)	128.27 (5.050)	62.23 (2.450)	62.23 (2.450)	134.62 (5.300)	3

These connectors do not have a symmetrical board layout pattern. The 120 pin connectors have 80 pins on one side and 40 pins on the other. All other pin counts have 100 pins on one side and the balance on the other side.

8806-□□□-170L□-F (Receptacle, With flanges, Right angle)

Unit : mm(inch)

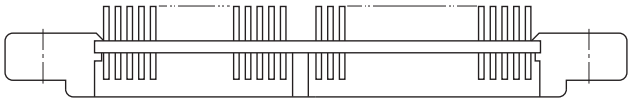

Printed Circuit Board Layout (Component Side View)

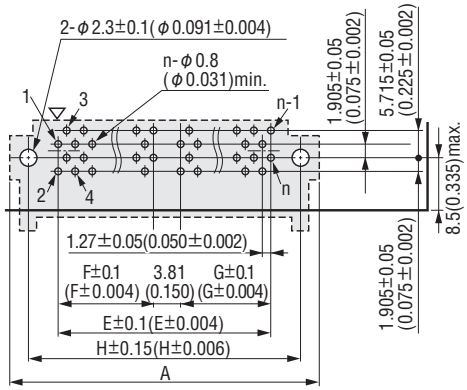

Recommended PCB Thickness $t = 1.6^{+0.2}_{-0.1}$ $(0.063^{+0.008}_{-0.004})$

▽=Polarity identification "n" is number of contacts.

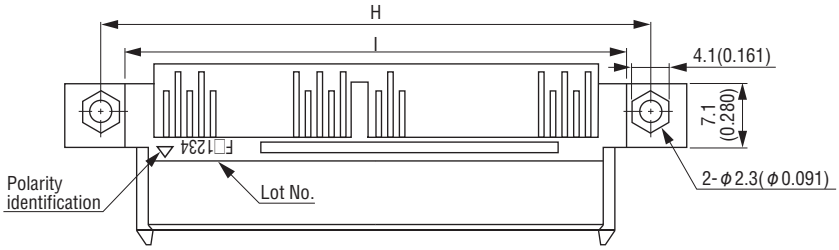

X-X′Cross Section

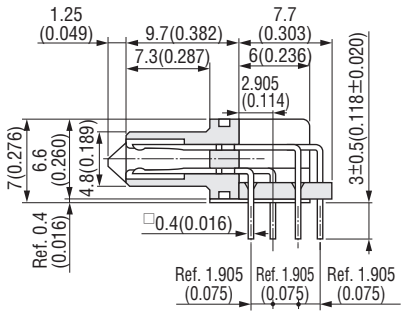

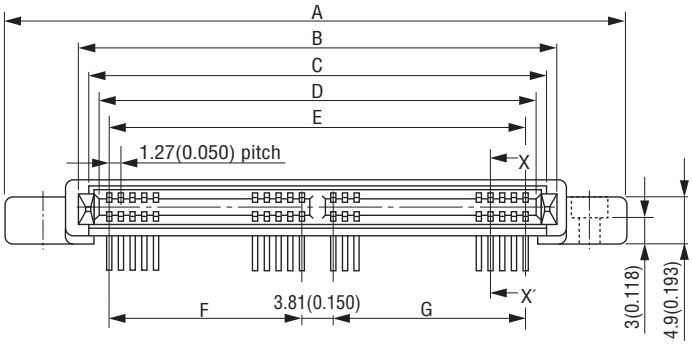

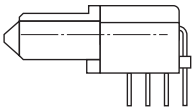

Packing style
Pipe

Product Table / Dimensions

No. of contact	Part Number	A	B	C	D	E	F	G	H	I	Number of packaging
120	8806-120-170L□-F	99.2 (3.906)	84.1 (3.311)	81.47 (3.207)	79.47 (3.129)	77.47 (3.050)	24.13 (0.950)	49.53 (1.950)	91.44 (3.600)	86.5 (3.406)	5
140	8806-140-170L□-F	111.9 (4.406)	96.8 (3.811)	94.17 (3.707)	92.17 (3.629)	90.17 (3.550)	24.13 (0.950)	62.23 (2.450)	104.14 (4.100)	99.2 (3.906)	4
160	8806-160-170L□-F	124.6 (4.906)	109.5 (4.311)	106.87 (4.207)	104.87 (4.129)	102.87 (4.050)	36.83 (1.450)	62.23 (2.450)	116.84 (4.600)	111.9 (4.406)	4
180	8806-180-170L□-F	137.3 (5.406)	122.2 (4.811)	119.57 (4.707)	117.57 (4.629)	115.57 (4.550)	49.53 (1.950)	62.23 (2.450)	129.54 (5.100)	124.6 (4.906)	3
200	8806-200-170L□-F	150.0 (5.906)	134.9 (5.311)	132.27 (5.207)	130.27 (5.129)	128.27 (5.050)	62.23 (2.450)	62.23 (2.450)	142.24 (5.600)	137.3 (5.406)	3

These connectors do not have a symmetrical board layout pattern. The 120 pin connectors have 80 pins on one side and 40 pins on the other. All other pin counts have 100 pins on one side and the balance on the other side.

8807-□□□-170L□-F (Receptacle, Without flanges, With hooks, Right angle)

Unit : mm(inch)

Printed Circuit Board Layout (Component Side View)

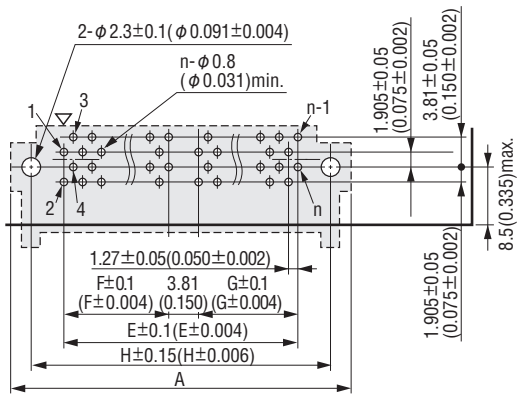

Recommended PCB Thickness $t = 1.6^{+0.2}_{-0.1}$ $(0.063^{+0.008}_{-0.004})$

▽=Polarity identification "n" is number of contacts.

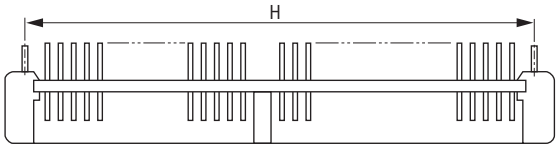

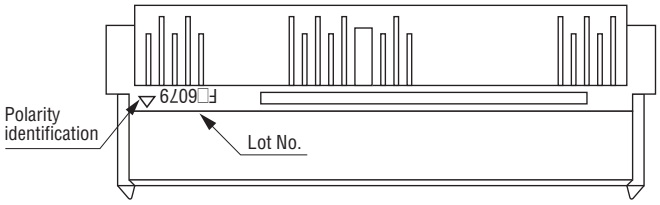

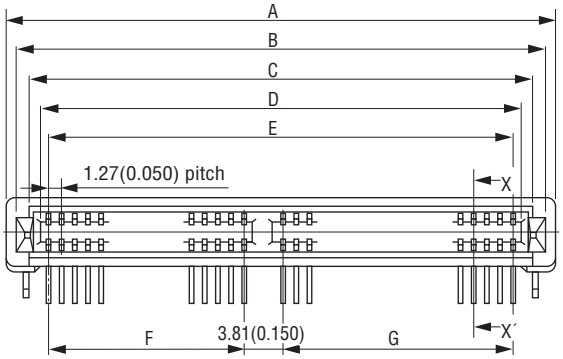

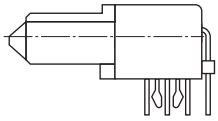

X-X′Cross Section

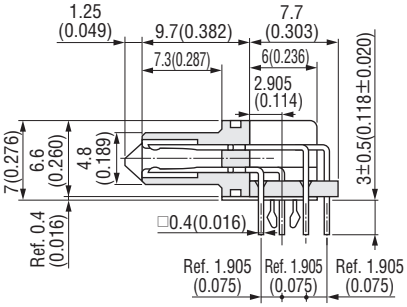

Packing style
Pipe

Product Table / Dimensions

No. of contact	Part Number	A	B	C	D	E	F	G	H	Number of packaging
120	8807-120-170L□-F	86.5 (3.406)	84.1 (3.311)	81.47 (3.207)	79.47 (3.129)	77.47 (3.050)	24.13 (0.950)	49.53 (1.950)	83.82 (3.300)	5
140	8807-140-170L□-F	99.2 (3.906)	96.8 (3.811)	94.17 (3.707)	92.17 (3.629)	90.17 (3.550)	24.13 (0.950)	62.23 (2.450)	96.52 (3.800)	5
160	8807-160-170L□-F	111.9 (4.406)	109.5 (4.311)	106.87 (4.207)	104.87 (4.129)	102.87 (4.050)	36.83 (1.450)	62.23 (2.450)	109.22 (4.300)	4
180	8807-180-170L□-F	124.6 (4.906)	122.2 (4.811)	119.57 (4.707)	117.57 (4.629)	115.57 (4.550)	49.53 (1.950)	62.23 (2.450)	121.92 (4.800)	3
200	8807-200-170L□-F	137.3 (5.406)	134.9 (5.311)	132.27 (5.207)	130.27 (5.129)	128.27 (5.050)	62.23 (2.450)	62.23 (2.450)	134.62 (5.300)	3

These connectors do not have a symmetrical board layout pattern. The 120 pin connectors have 80 pins on one side and 40 pins on the other. All other pin counts have 100 pins on one side and the balance on the other side.

8816-□□□-170L□-F (Plug, With flanges, Right angle)

Unit : mm(inch)

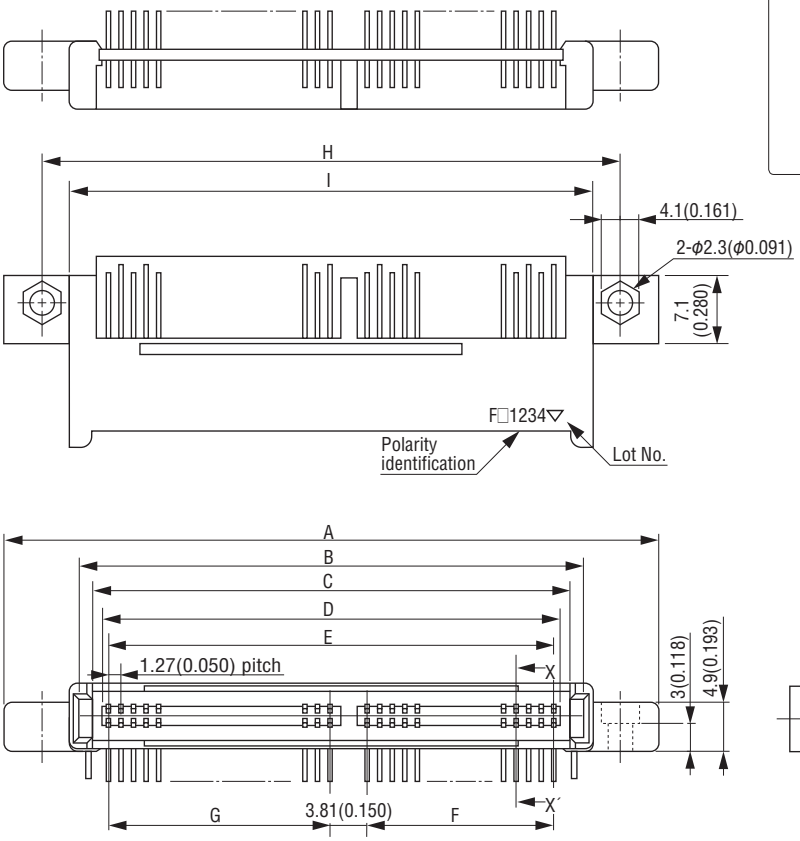

Printed Circuit Board Layout (Component Side View)

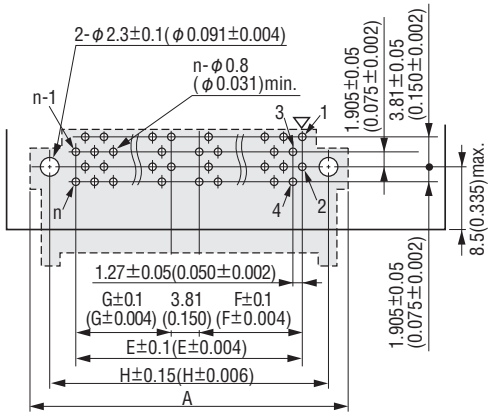

Recommended PCB Thickness $t = 1.6^{+0.2}_{-0.1}$ $(0.063^{+0.008}_{-0.004})$

▽=Polarity identification "n" is number of contacts.

X-X′Cross Section

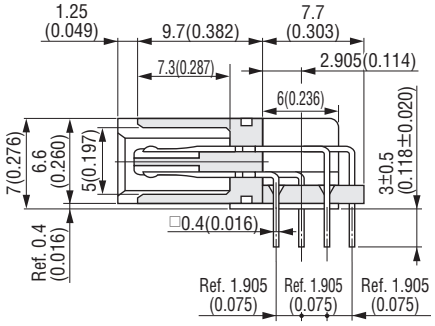

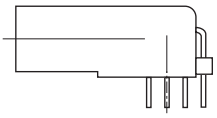

Packing style
Pipe

Product Table / Dimensions

No. of contact	Part Number	A	B	C	D	E	F	G	H	I	Number of packaging
120	8816-120-170L□-F	99.2 (3.906)	84.5 (3.327)	81.87 (3.223)	79.17 (3.117)	77.47 (3.050)	24.13 (0.950)	49.53 (1.950)	91.44 (3.600)	86.5 (3.406)	5
140	8816-140-170L□-F	111.9 (4.406)	97.2 (3.827)	94.57 (3.723)	91.87 (3.617)	90.17 (3.550)	24.13 (0.950)	62.23 (2.450)	104.14 (4.100)	99.2 (3.906)	4
160	8816-160-170L□-F	124.6 (4.906)	109.9 (4.327)	107.27 (4.223)	104.57 (4.117)	102.87 (4.050)	36.83 (1.450)	62.23 (2.450)	116.84 (4.600)	111.9 (4.406)	4
180	8816-180-170L□-F	137.3 (5.406)	122.6 (4.827)	119.97 (4.723)	117.27 (4.617)	115.57 (4.550)	49.53 (1.950)	62.23 (2.450)	129.54 (5.100)	124.6 (4.906)	3
200	8816-200-170L□-F	150.0 (5.906)	135.3 (5.327)	132.67 (5.223)	129.97 (5.117)	128.27 (5.050)	62.23 (2.450)	62.23 (2.450)	142.24 (5.600)	137.3 (5.406)	3

These connectors do not have a symmetrical board layout pattern. The 120 pin connectors have 80 pins on one side and 40 pins on the other. All other pin counts have 100 pins on one side and the balance on the other side

8817-□□□-170L□-F (Plug, Without flanges, With hooks, Right angle)

Unit : mm(inch)

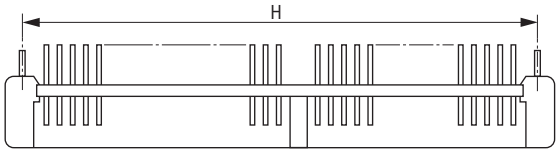

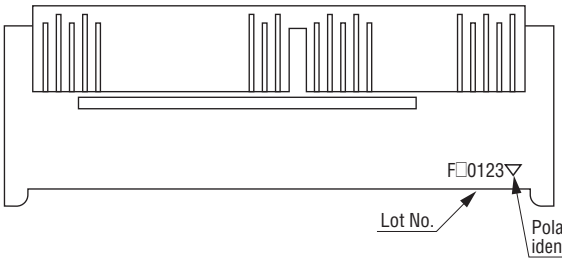

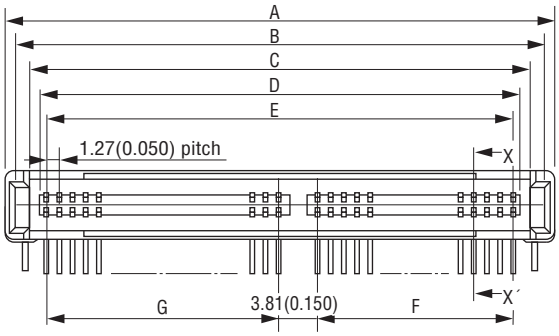

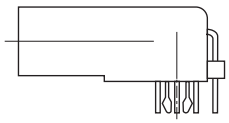

For 160, 180, 200 pins

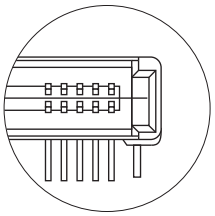

For 120, 140 pins

Printed Circuit Board Layout (Component Side View)

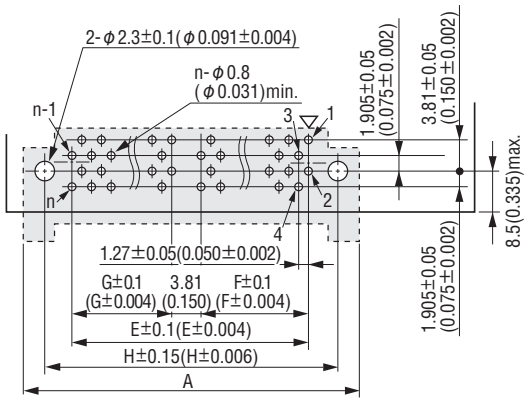

Recommended PCB Thickness $t = 1.6^{+0.2}_{-0.1}$ $(0.063^{+0.008}_{-0.004})$

▽=Polarity identification "n" is number of contacts.

X-X′Cross Section

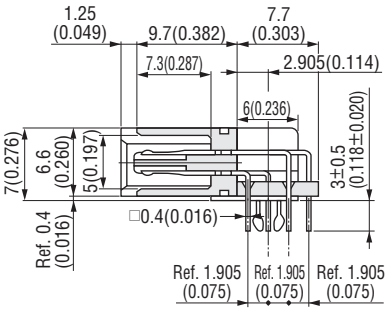

Packing style
Pipe

Product Table / Dimensions

No. of contact	Part Number	A	B	C	D	E	F	G	H	Number of packaging
120	8817-120-170L□-F	86.5 (3.406)	84.5 (3.327)	81.87 (3.223)	79.17 (3.117)	77.47 (3.050)	24.13 (0.950)	49.53 (1.950)	83.82 (3.300)	5
140	8817-140-170L□-F	99.2 (3.906)	97.2 (3.827)	94.57 (3.723)	91.87 (3.617)	90.17 (3.550)	24.13 (0.950)	62.23 (2.450)	96.52 (3.800)	5
160	8817-160-170L□-F	111.9 (4.406)	109.9 (4.327)	107.27 (4.223)	104.57 (4.117)	102.87 (4.050)	36.83 (1.450)	62.23 (2.450)	109.22 (4.300)	4
180	8817-180-170L□-F	124.6 (4.906)	122.6 (4.827)	119.97 (4.723)	117.27 (4.617)	115.57 (4.550)	49.53 (1.950)	62.23 (2.450)	121.92 (4.800)	4
200	8817-200-170L□-F	137.3 (5.406)	135.3 (5.327)	132.67 (5.223)	129.97 (5.117)	128.27 (5.050)	62.23 (2.450)	62.23 (2.450)	134.62 (5.300)	3

These connectors do not have a symmetrical board layout pattern. The 120 pin connectors have 80 pins on one side and 40 pins on the other. All other pin counts have 100 pins on one side and the balance on the other side.