USLS SERIES

RoHS Compliant

0.4mm PITCH CONNECTOR FOR MICRO COAXIAL CABLE (STACKING TYPE)

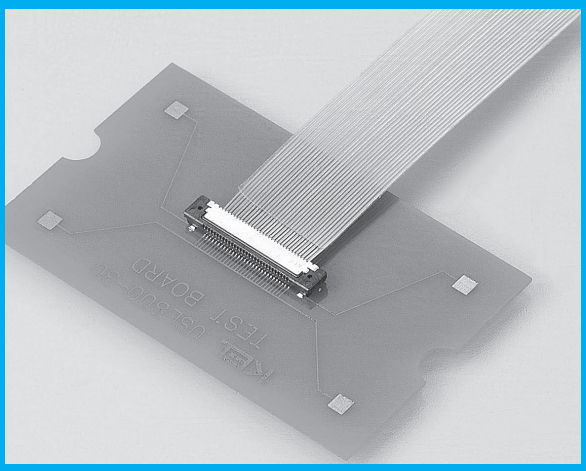

FEATURES

- Compact connector with a low profile of 1.65 mm(0.065") and a mating width of 3.05 mm(0.120").
- For micro coaxial cable (#42 AWG).
- IDC of contacts all together is adopted for improved connection reliability and more compact connectors.
- Equipped with a metal shell, noise reduction and product strength are ensured.
- Multiple ground terminals are provided for enhanced transmission characteristics and EMS protection.
- Highly reliable design with effective mating length of 0.35mm(0.014").
- Nickel barrier of the board side contact prevents solder wicking.
- Possible to put through narrow tube with a diameter of ϕ2.7mm(ϕ 0.106") even after soldering.

*Specially designed withdrawal jig is available.

ORDER CODE

USLS00-□□-□

① ② ③

*Please order in multiples of the quantity per package.

① 【Type】 USLS00 : Receptacle (PCB side connector)

② 【Number of contacts】 20 : 20 pin 30 : 30 pin 40 : 40 pin

③ 【Number of packaging】 A : 500pcs. per reel B : 1,000pcs. per reel C : 3,000pcs. per reel

ORDER CODE

USLS20-□□

① ②

*Please order in multiples of the quantity per package.

① 【Type】 USLS20 : Plug (Cable side connector)

② 【Number of contacts】 20 : 20 pin 30 : 30 pin 40 : 40 pin

*Plug (cable side connector) is composed of base and cover.

SPECIFICATIONS

Material and plating	
Insulator material	Glass-filled LCP(UL94V-0),Black
Contact material	Copper alloy
Contact plating	Gold over Nickel Nickel Barrier(Board side)
Shell material	Copper alloy
Shell plating	Gold over Nickel(Shell 1) Tin copper over Nickel(Shell 2)
Cover material	Glass-filled LCP(UL94V-0),Black
Adsorption tape material	[USLS00] Polyimide

Electrical characteristics	
Rated current	0.25A per contact
Contact resistance	100mΩ max.
Dielectric withstanding voltage	200V AC for 1minute
Insutulation resistance	100MΩ min.at 250V DC
Operating temperature	-40°C to +85°C
Applicable cable	#42 AWG Micro coaxial cable

Mating drawing

Unit : mm(inch)

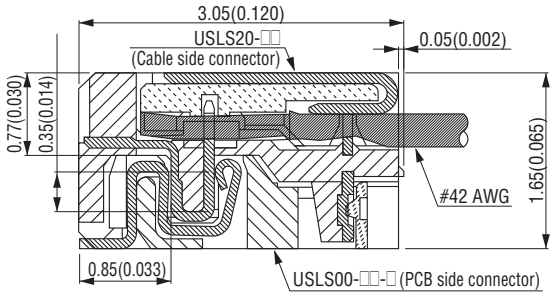

USLS00-□□-□ (Receptacle, PCB side connector)

Unit : mm(inch)

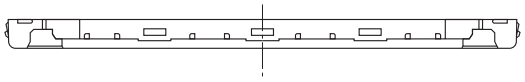

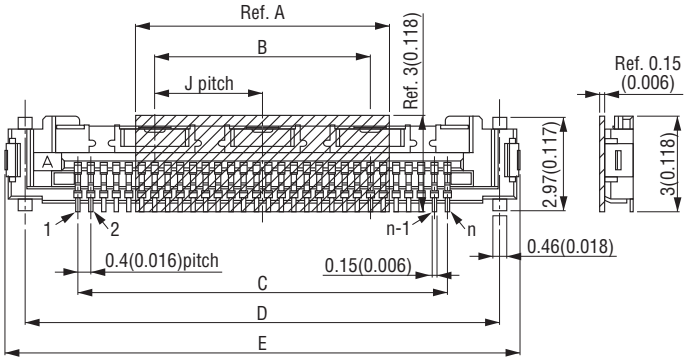

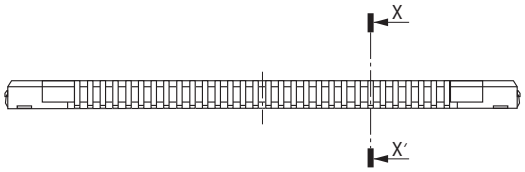

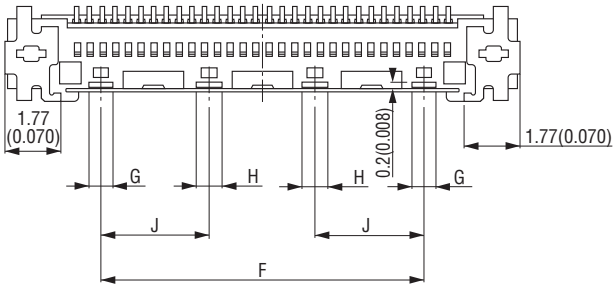

Printed Circuit Board layout (Component side view)

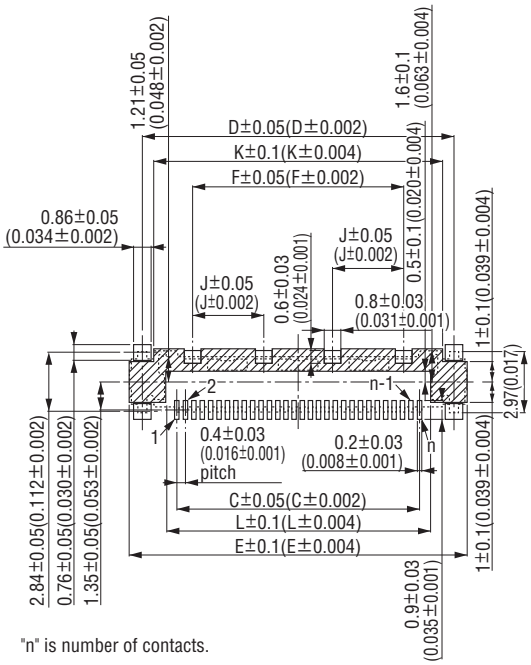

"n" is number of contacts.

X-X′Cross section

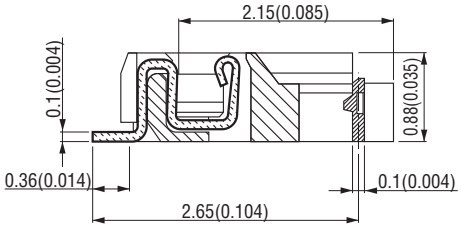

Packaging style
Embossed tape

Product table

Part number	Number of packaging
USLS00-□□-A	500
USLS00-□□-B	1,000
USLS00-□□-C	3,000

Product table / Dimensions

No. of contacts	Part number	A	B	C	D	E	F	G	H	J	K	L
20	USLS00-20-□	5.0 (0.197)	3.1 (0.122)	7.6 (0.299)	10.91 (0.430)	12.14 (0.478)	6.2 (0.244)	0.60 (0.024)	0.6 (0.024)	3.1 (0.122)	9.8 (0.386)	8.6 (0.339)
30	USLS00-30-□	8.0 (0.315)	6.8 (0.268)	11.6 (0.457)	14.91 (0.587)	16.14 (0.635)	10.1 (0.398)	0.75 (0.030)	0.8 (0.031)	3.4 (0.134)	13.8 (0.543)	12.6 (0.496)
40	USLS00-40-□	8.0 (0.315)	10.5 (0.413)	15.6 (0.614)	18.91 (0.744)	20.14 (0.793)	14.0 (0.551)	0.80 (0.031)	0.8 (0.031)	3.5 (0.138)	17.8 (0.701)	16.6 (0.654)

USLS20-□□ (Plug, Cable side connector)

Unit : mm(inch)

USLS20-□□ Base

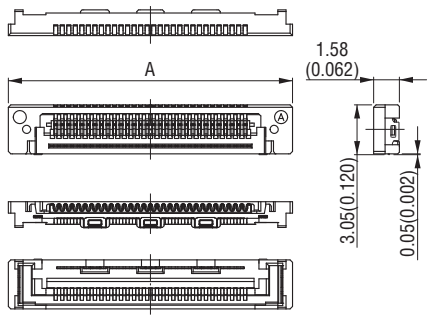

USLS20-□□CV

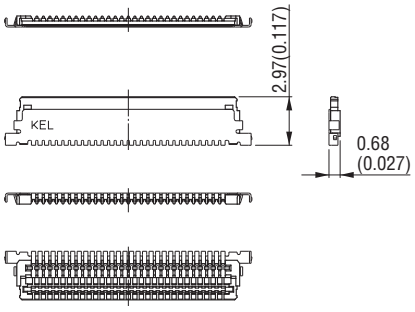

*USLS20-□□Base and USLS20-□□CV are component parts of USLS20-□□.

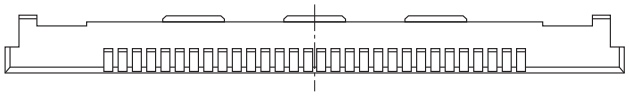

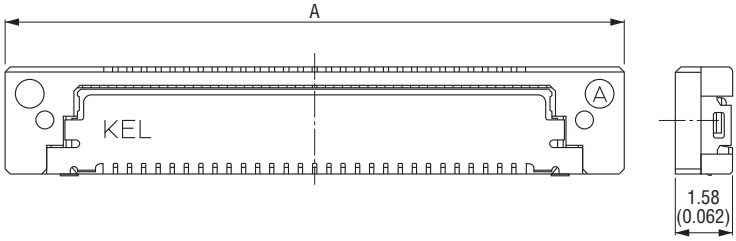

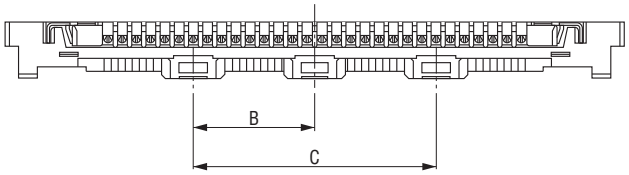

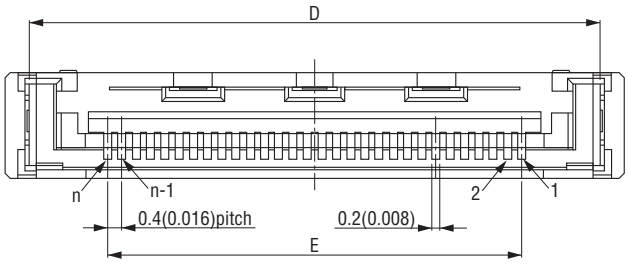

"n" is number of contacts.

Packaging style
Tray

Product table / Dimensions

No. of contacts	Part number	A	B	C	D	E	Number of packaging
20	USLS20-20	13.4 (0.528)	3.1 (0.122)	–	12.0 (0.472)	7.6 (0.299)	160
30	USLS20-30	17.4 (0.685)	3.4 (0.134)	6.8 (0.268)	16.0 (0.630)	11.6 (0.457)	120
40	USLS20-40	21.4 (0.843)	3.5 (0.138)	10.5 (0.413)	20.0 (0.787)	15.6 (0.614)	100

Cable assembly

ORDER CODE USLS20-□□-□□□.□-□□(□)□

① ② ③ ④ ⑤ ⑥ ⑦

① 【Type】 USLS20 : Plug (Cable side connector)	⑤ 【Laminated tape】 No code : Without tape H : With tape
② 【Number of contacts】 20 : 20 pin 30 : 30 pin 40 : 40 pin	⑥ 【Quantity】(B) : 10 to 49pcs (C) : 50 to 99pcs (D) : 100pcs or more
③ 【Cable length (cm)】 L : Dimension(Example : 013.5=13.5cm)	⑦ 【Cable classification】 Y: Standard No code: Upon request
④ 【Wiring code】 B : Pin 1 to Pin 1 C : Pin 1 to Pin n	

*Applicable cable length : 4 to 100cm Minimum cable length for USLS20-□□-□□□.□-BH(□) : 7cm

Cable assembly style

Unit : mm(inch)

Wiring code : Pin 1 to Pin 1

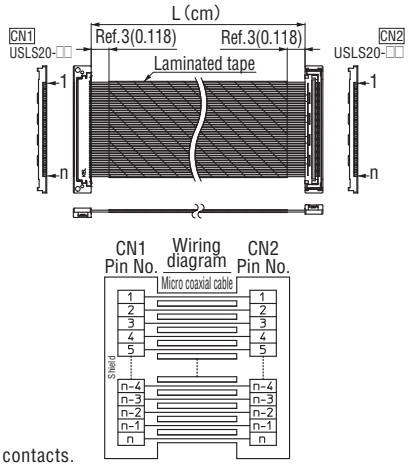

* "n" is number of contacts.

Wiring code : Pin 1 to Pin n

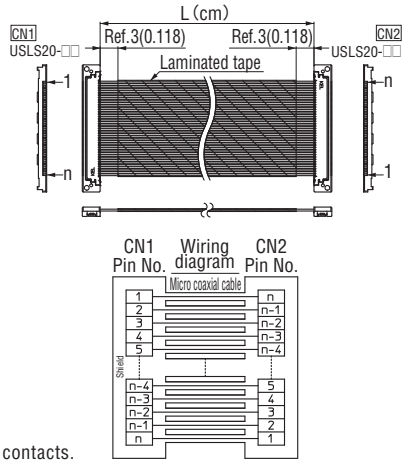

* "n" is number of contacts.

*Please contact your local KEL sales office for inquiries regarding cable length and tolerance.
*Laminated tape is designed to be a little wider than the cable width. Please contact your local KEL sales office for further details.

ORDER CODE USL+S20-□□-□□□.□-□□(□)□

① ② ③ ④ ⑤ ⑥ ⑦

① 【Type】 USL+S 20 : Plug (Cable side connector) Left side connector, CN1 / USL20 series Right side connector, CN2 / USLS20 series	
② 【Number of contacts】 20 : 20 pin 30 : 30 pin 40 : 40 pin	
③ 【Cable length (cm)】 L : Dimension(Example : 013.5=13.5cm)	
④ 【Wiring code】 B : Pin 1 to Pin 1 C : Pin 1 to Pin n	
⑤ 【Laminated tape】 No code : Without tape H : With tape	
⑥ 【Quantity】(B) : 10 to 49pcs (C) : 50 to 99pcs (D) : 100pcs or more	
⑦ Cable classification】 Y: Standard No code: Upon request	

*Applicable cable length : 4 to 100cm Minimum cable length for USL+S20-□□-□□□.□-BH(□) : 7cm

Cable assembly style

Unit : mm(inch)

Wiring code : Pin 1 to Pin 1

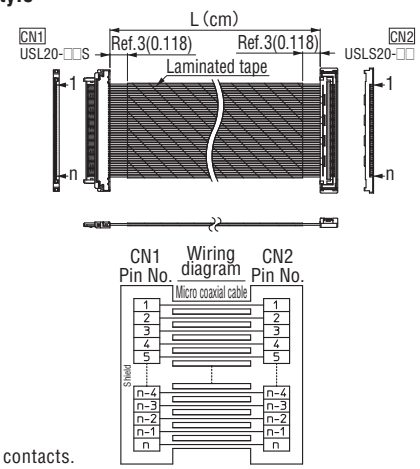

* "n" is number of contacts.

Wiring code : Pin 1 to Pin n

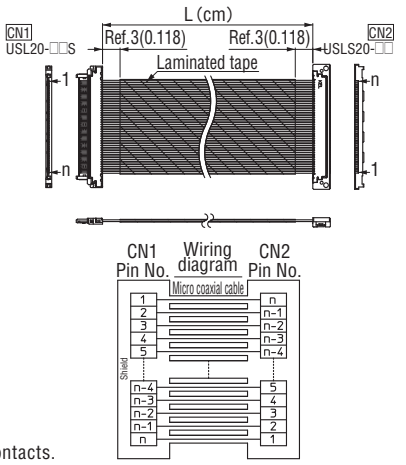

* "n" is number of contacts.

*Please contact your local KEL sales office for inquiries regarding cable length and tolerance.
*Laminated tape is designed to be a little wider than the cable width. Please contact your local KEL sales office for further details.

USLS21 SERIES

RoHS Compliant

0.4mm PITCH CONNECTOR FOR MICRO COAXIAL CABLE /SOLDERED CONNECTION (STACKING TYPE)

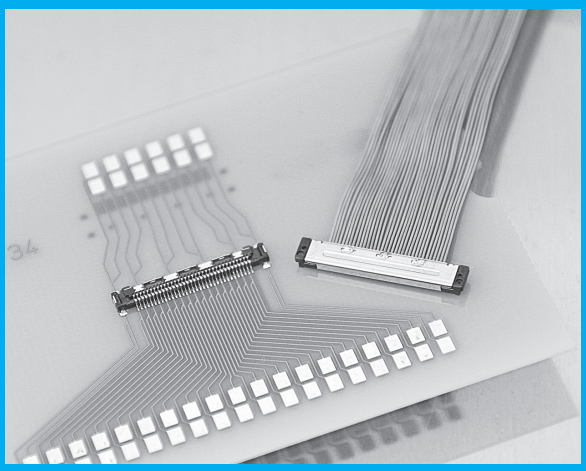

FEATURES

- Compact connector with a low profile of 1.65 mm(0.065") and a mating width of 3.05 mm(0.120").
- For micro coaxial cable(#40 AWG, #42 AWG, #44 AWG, #46 AWG).
- Provided with a soldered cable connection.
- Equipped with a metal shell, noise reduction and product strength are ensured.
- Multiple ground terminals are provided for enhanced transmission characteristics and EMS protection.
- Highly reliable design with effective mating length of 0.35mm(0.014").
- Nickel barrier of the board side contact prevents solder wicking.
- Possible to put through narrow tube with a diameter of ϕ4m-m(ϕ 0.157") even after soldering.

ORDER CODE

USLS00-34-□

① ② ③

*Please order in multiples of the quantity per package.

① 【Type】 USLS00 : Receptacle (PCB side connector)
② 【Number of contacts】 34 : 34 pin
③ 【Number of packing】 A : 500pcs. per reel B : 1,000pcs. per reel C : 3,000pcs. per reel

ORDER CODE

USLS21-34

① ②

*Please order in multiples of the quantity per package.

① 【Type】 USLS21 : Plug (Cable side connector) soldered cable connection type
② 【Number of contacts】 34 : 34 pin

*Plug(cable side connector) is composed of a base and a shell.

SPECIFICATIONS

Material and finish		Electrical characteristics	
Insulator material	Glass-filled LCP(UL94V-0),Black	Rated current	0.25A per contact
Contact material	Copper alloy	Contact resistance	100mΩ max.
Contact plating	Gold over Nickel	Dielectric withstanding voltage	200V AC for 1minute
Shell material	[USLS00] Copper alloy [USLS21] Stainless	Insutulation resistance	100MΩ min.at 250V DC
		Operating temperature	-40°C to +85°C
Shell plating	Gold over Nickel	Applicable cable	#40/42/44/46 AWG Micro coaxial cables (Outermost diameter: max. 0.39 mm(0.015"))
Adsorption tape material	[USLS00] Polyimide		

Mating drawing

Unit : mm(inch)

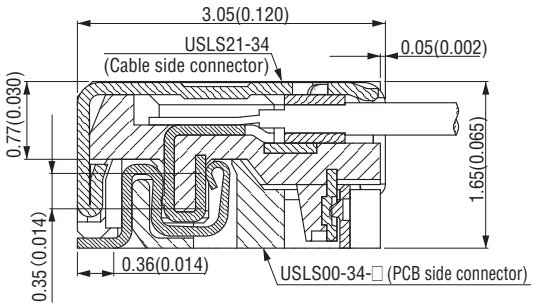

USLS00-34-□（Receptacle, PCB side connector）

Unit : mm(inch)

Printed Circuit Board layout (Component side view)

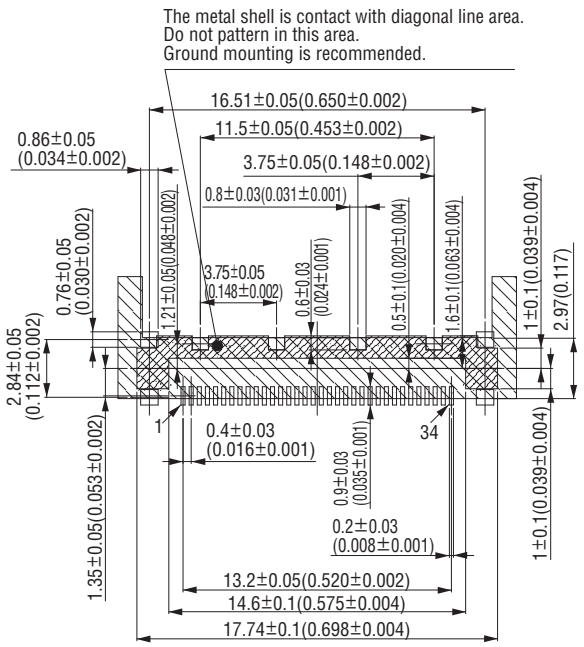

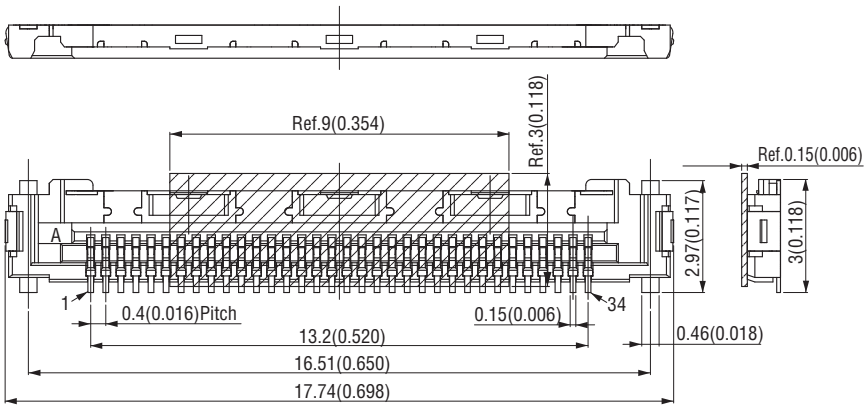

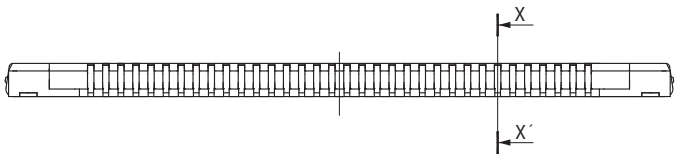

X-X′Cross section

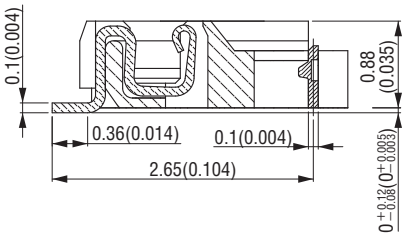

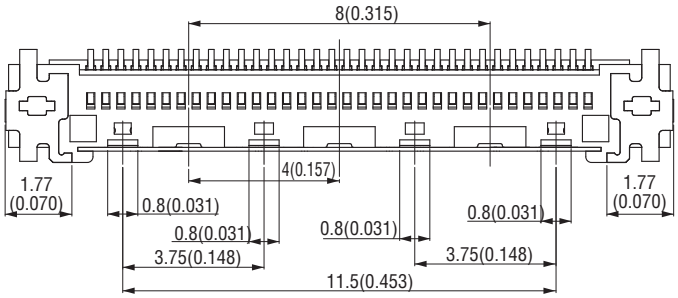

Packaging style
Embossed tape

Product table

Part number	Number of packaging
USLS00-34-A	500
USLS00-34-B	1,000
USLS00-34-C	3,000

USLS21-34 (Plug, Cable side connector)

Unit : mm(inch)

USLS21-34BASE

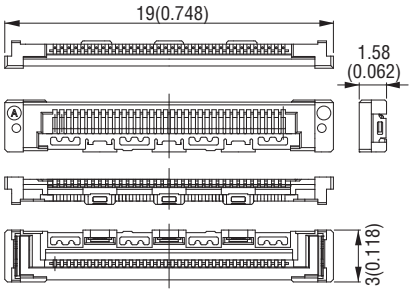

Number of packaging
5,000

USLS21-34SHELL

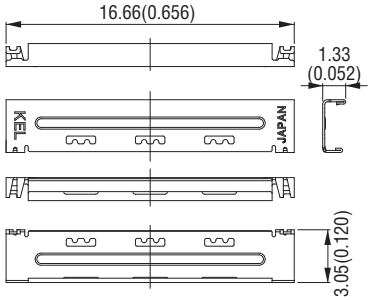

Number of packaging
10,000

*USLS21-34BASE and USL20-34SHELL are component parts of USL21-34.

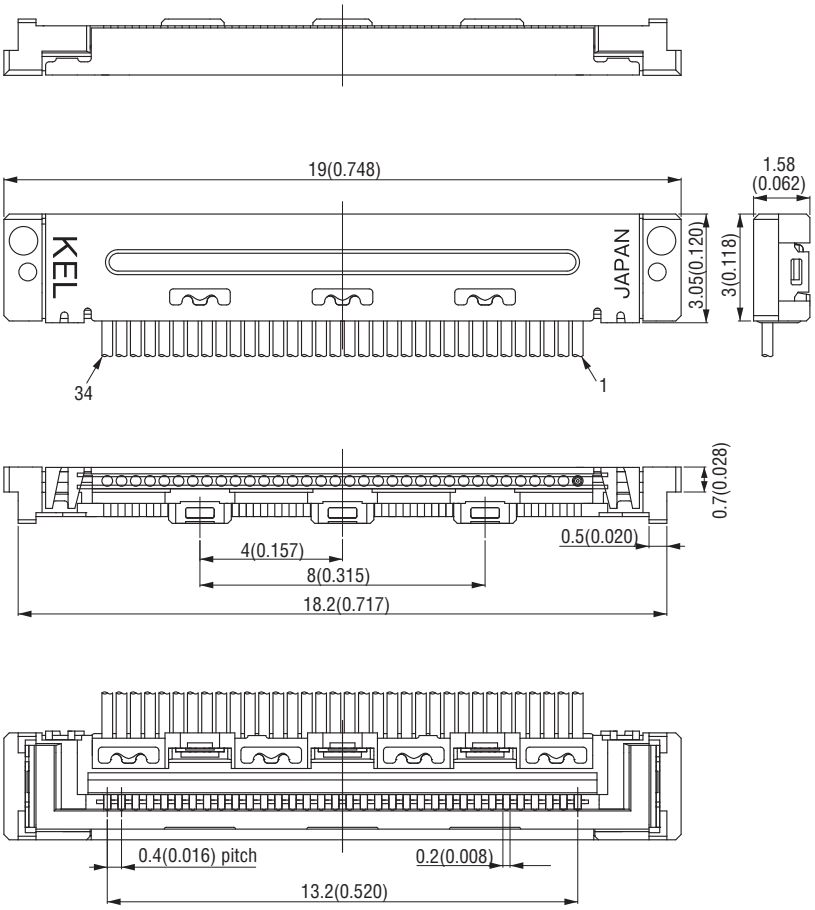

Packaging style
Other

Product table

No. of contacts	Part number	Number of packaging
34	USLS21-34	10,000